A Multiple Issue Design Project

Devdas M. Pai [1] and G. Juri Filatovs[2]

Abstract

A design project used in a senior capstone design course, which required consideration of multiple issues and became a vehicle for teaching many design aspects, is described. The design objective was to carry to the prototype stage a pocket size, battery operated, flower and small plant cutter. The initial student concerns were about the battery-motor-linkage-cutter mechanism; the power available is marginally adequate and requires careful system design and integration. It gradually emerged, however, that other issues would dominate the commercial success, in particular the potential misuse and safety that have enormous potential for liability. Retaining the usefulness of the device while adequately addressing these contrary requirements proved enormously difficult. The use of a product design allowed the project to become a vehicle for aspects such as ergonomics, ethics, tort law, and industrial design. Student response and some of the teaching issues encountered are discussed.

Introduction

This paper discusses our experiences with a project used in the Senior Capstone design course in the Department of Mechanical Engineering at NCA&T State University. It was to be carried to the prototype stage with sufficient physical realization to indicate its feasibility. There were two reporting stages, an interim report on the design concept before construction of the prototype was allowed, and a final report centering on the documentation packet for the product design. This latter would include production drawings of the final product, documents on the designs intent, vendor information, safety information, and manufacturability and production procedures. The 'clients' / judges consisted of the course instructors and two experienced designers. The latter two were the chief engineer of a large international tobacco company and a manufacturing engineer from a small-appliance manufacturing firm. This final report would also detail the design assumptions, decisions, and performance predictions. There were three five-student groups, working independently, albeit there were largely joint lectures addressing common issues. The discussion here is a conspectus of all the groups work.

Project Overview

The design objective was a battery-powered, garden pruner-shear-trimmer. It was to be lightweight, small/pocketable and perhaps have 'gadget value'. The cost was to be low enough for sales through gardening centers, hardware stores, and as an impulse item. An important consideration was that gardening is enjoyed by the elderly, who may have some physical limitations (arthritis, loss of strength),

[1] Department of Mechanical Engineering, NC A&T State University, Greensboro, NC 27411

[2] Department of Mechanical Engineering, NC A&T State University, Greensboro, NC 27411

and the proposed device would extend their activity. Issues such as the type of plants or flowers, operating conditions, and performance goals were to be determined as part of the project.

Initial Conceptual Designs

The interim reports reflected concerns with enumerating the design needs, assembling information on candidate components, and conceptual design. The technical aspects of providing sufficient performance, cutting capacity, and the duty cycle, claimed the most attention and showed that battery performance is a critical limitation in portable mechanisms. This focused attention on the electromechanical system, with juggling of battery-motor curves, and system optimization. Most designs used a power screw, although one design used an energy-storing spring to drive the blades, dramatically increasing the cutting capacity. The eventual power source adopted by all groups was a 3.6 V NiCad battery driving a 3V gearmotor of the type found in a typical small power screwdriver. This combination was capable of at least 75 cuts on table flowers and at least 25 cuts through 1/8 in. rose stems.

While performance maximization was the obvious dominant concern, other issues received attention. The presence of moisture in a garden setting was recognized and waterproofing was incorporated, as were considerations such as ease of reaching into dense shrubbery. One design used disposable razor blades to maintain sharpness. Anvil vs shearing cuts, necessary for different types of plants were examined. The potential for injury was recognized to a certain degree, protective covers for the cutters being recommended, along with warning labels. None of the designs, however, seriously considered the inherent dangers of the proposed devices in a household setting, where casual and careless use, and access by children, would be common. Nor were potential misuses such as attempting to cut something too large or unsuitable, considered. Figures 1 - 3 show some of the students' proposed cutter configurations. *All figures are directly taken (unaltered) from student reports and reflect the variability in quality of different students' work.*

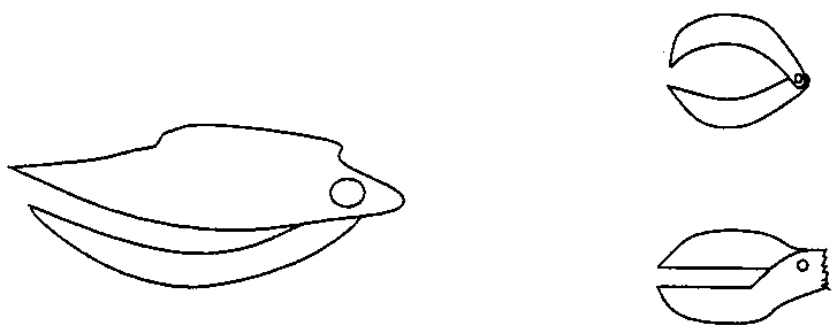

Figure 1 Proposed cutter configurations

These are obviously punishing objects, capable of inflicting great injury, subject to mishandling (e.g. being dropped), and inviting carelessness. These deficiencies are not for the customer to discover, after manufacture has initiated.

There were other important issues, most notably manufacturability and production. The high forces and small sizes required metal components, most of them non-standard. There were also excessive sub-assemblies, which required careful alignment and joining.

Teaching Strategy

Following the delivery of the interim reports, several lectures were devoted to tort law, product liability, and professional responsibility. In particular, articles and advertisements from law journals were effective, (see References). The advertisements in the various magazines published by the Association of Trial Lawyers of America for specialists in various aspects of product liability, anatomical models of severed limbs for use in injury trials, and the focus on engineering negligence, were especially effective. Several case studies on defective product litigation, focusing on misuse and tests for foreseeability were also studied. It was a deliberate strategy to not stress safety aspects in the initial assignment of the project, but allow discovery of this issue by the students themselves.

The importance of ease of assembly, use of standard components, avoidance of critical tolerances, and types of materials commonly used for household appliances were discussed.

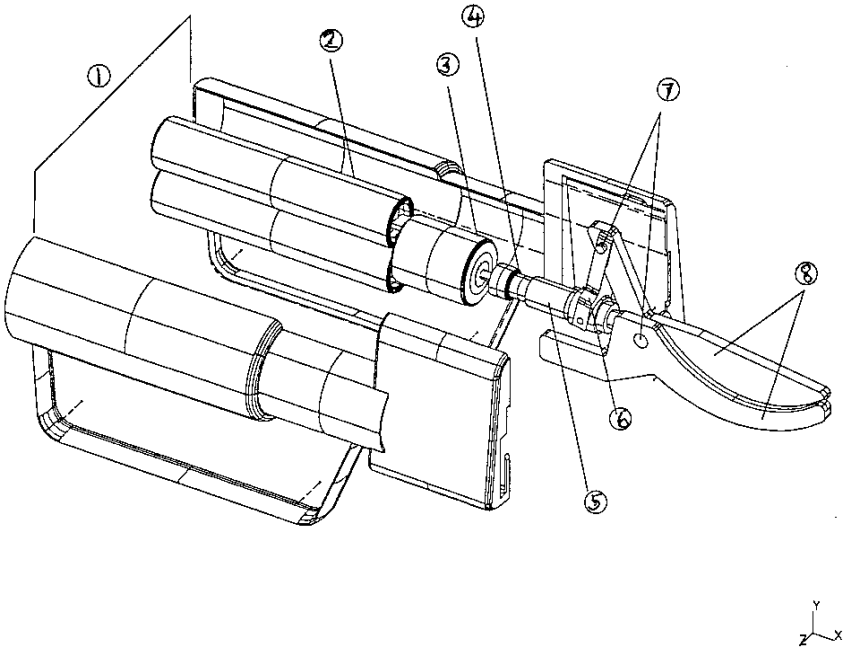

Figure 2 Exploded view of anvil type cutter (note lack of any safety features)

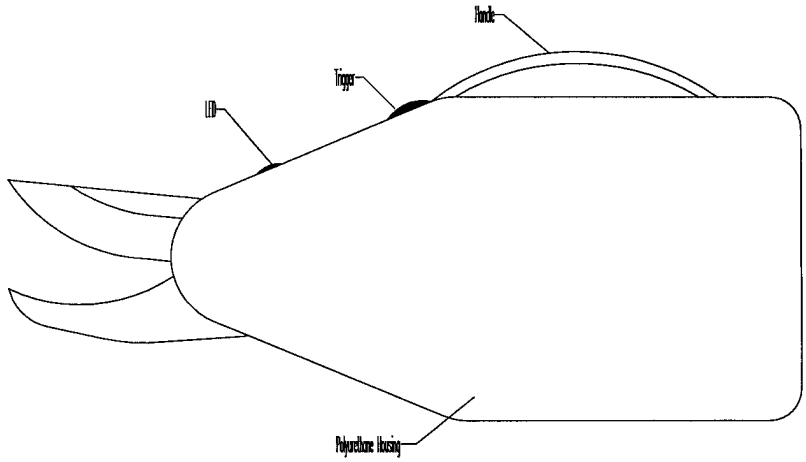

Figure 3 Another hazardous proposed design

Final Design

These issues led to major reconsiderations. Much more specific and detailed user scenarios were generated, and the safety, misuse, and malfunction constraints that resulted were incorporated into the design requirements. These immediately complicated the design, in all cases necessitating major re-designs. The danger of a spring-driven cutting blade was recognized, and the safety advantages of a much slower cutting speed recognized. Among safety principles eventually incorporated were the following:

- "child-proofing" by incorporation of physical and electronic interlocks and safeties
- restricting physical access to the blade and limiting the size of the cut

Manufacturing concerns were also addressed. Simplification by reduction of components, and the more extensive use of plastic was undertaken. More detailed calculations showed that plastic components (gears, linkages, power screw) could not be directly substituted for metal. The high local forces also forced stiffening members, when plastic was substituted for the frame. These forced major compromises on the final design.

Figures 4 & 5 show some of the redesigns. The compromises engendered in the safety and misuse features obviously reduced some of the utility and performance of the original designs; the extra steps necessitated by the safety procedures also discourage casual use. These lessened the desirability and marketability of the proposed product. Compensations came from simplified assembly and use of standard parts. Overall, the safety concerns appeared to dominate in the end.

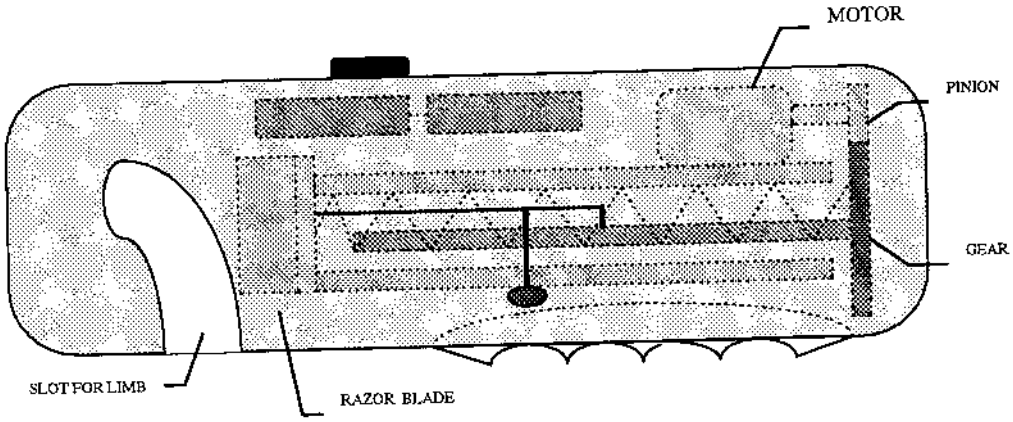

Figure 4 Redesigned pruner incorporating safety features

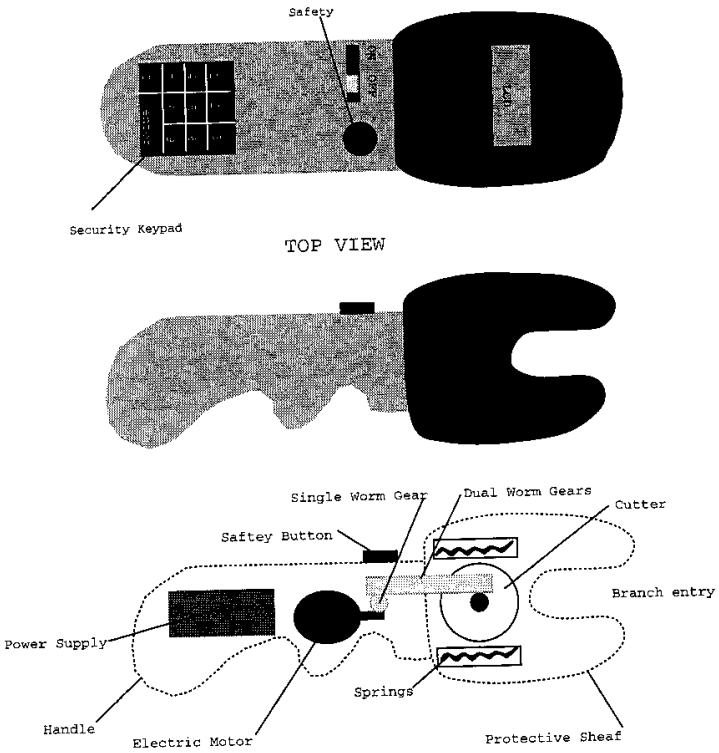

Figure 5 Another redesign incorporating multiple safety features

Summary Observations

Obviously, the ethical responsibility to the public to deliver a safe product, and the legal consequences of failure to do so, are important lessons for students to learn. The engineer must engage in active protection of users against misuse and malfunction. These factors, however, are also the vehicle for other issues. The students are learning various design aspects, including the process of design. The

dangers of incomplete problem definition make emphatic the need to allow for sufficient time at this stage, and the requirement for validation procedures before the design is released. It made clear the fact that the more competing design requirements, the more compromises and balancing of factors, and the greater the reduction of certainty in success of a design. These are the lessons to the student. The lesson to the instructor is reflexive of this. To allow discovery, and projecting the need for redesign time to the original design, arising from the probable oversight of many factors, increases the value of design projects. We have found that a guided struggle is much more instructive than overprompting. Using prospective household and everyday-type items as the design goal raises in a natural way a multiplicity of issues, making for a more comprehensive design experience.

References

The Association of Trial Lawyers of America, *Trial Magazine*, Washington, DC, published monthly.

The Association of Trial Lawyers of America, *Product Liability Law Reporter*, Washington, DC, published monthly.

The Association of Trial Lawyers of America, *Professional Negligence Law Reporter*, Washington, DC, published monthly.

Forster, J. F., and P. R. Schreyer, "The Long Arm of Liability," *Civil Engneering*, Vol. 59, No. 9, pp. 80-81, 1989.

Hunziker, J. R., and T. O. Jones, "Product Liability and Innovation," National Academy Press, Washington, DC 1994.

Lepatner, B. B., and R. A. Banner, "8 Tips for Avoiding Liability Claims," *American Consulting Engineer*, Vol. 4, No. 2, Second Quarter, p. 8, 1993.

Schoumacher, B., "Engineers and the Law: An Overview," New York: Van Nostrand Reinhold.

Settle, S. M., and S. Spigelmyer, "Product Liability: A Multibillion-Dollar Dilemma," American Management Associations, New York, 1984.

Smith, C. O.: "Products Liability: Are You Vulnerable?" Prentice-Hall, Englewood Cliffs, NJ, 1981.

.

Devdas M. Pai

Devdas Pai is Associate Professor of Mechanical Engineering at NC A&T State University. He received his M.S. and Ph.D. from Arizona State University. He teaches in the area of manufacturing processes and machine design. A registered Professional Engineer in North Carolina, he serves on the Mechanical PE Exam committee. He is active in the Manufacturing and Materials Divisions of ASEE.

G. Juri Filatovs

Juri Filatovs is a Professor of Mechanical Engineering at NC A&T State University. He received his Ph.D. from the University of Missouri-Rolla. He has worked for McDonnell Aircraft and the US Bureau of Mines. His research is in the area of materials and properties of materials. He teaches the introductory materials science and the capstone design courses in mechanical engineering.